INSTALLATION & OWNER'S MANUAL

IRON FIST GRAPPLE UPPER ASSEMBLY
P/N: GRP-GP30-GRUS
PATENT PENDING

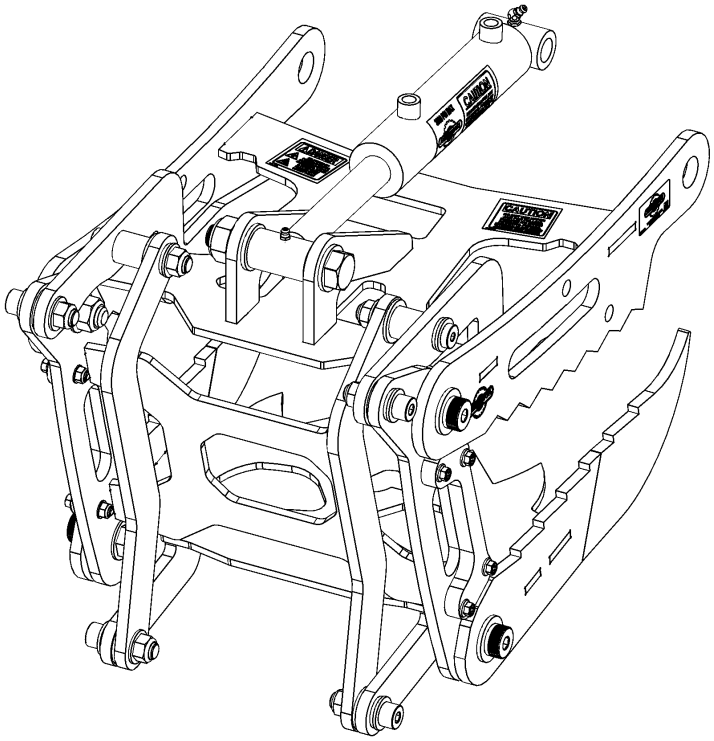

Approximate Installation Time
Experienced Dealer Technician – 45 Minutes
Average Dealer Technician – 60 Minutes
Do-It-Yourself – 90 Minutes

Approximate Product Specifications
Dimensions: 15” Wide X 21” Deep X 16” High
Weight: 72 Lbs.
Jaw Opening: 48” Jaw Closing: 4”

CAUTION ***Never push or pull with the upper jaw assembly. Doing so may result in damage to the Iron Fist Grapple and will void the warranty.***

Register your new product quickly online at **Artillian.com/product-registration/**

Artillian encourages all customers to register their Artillian products. However, failure to do so will not diminish right to warranty. Curtis Industries does not sell or share your information with anyone else.

Download a digital copy of your installation instructions online at **Artillian.com/literature/**

Artillian strives to continuously improve our products, technical documentation, etc. Therefore, the installation manual for this product may have been updated after your product was packaged. The latest revision of the installation manual can always be found at the website above.

The contents of this envelope are the property of the owner. Leave with the owner when installation is complete.

ASSEMBLY TIPS & MAINTENANCE

CAUTION

DO NOT USE THE UPPER GRAPPLE JAW FOR DIGGING OR PUSHING / PULLING FOREIGN OBJECTS OUTSIDE OF THE GRAPPLE BED. Damage to the hydraulic cylinder, linkages, hinges, hoses, etc. may occur. For example, simply holding a log in the grapple jaws and backing that log into a tree can result in extreme system back pressure of 6,000 PSI or greater. Obviously, that scenario could do serious damage to a system rated for 3,000 PSI max.

Assembly Tools Required

- Open-end wrenches, 3/4”, 15/16”, 1-1/8”, 1-1/4”
- Adjustable wrenches 5/16”, 3/8”
  (3/8” drive hex bits recommended)
- Torque wrench (160 Ft.-lb. +)
- Grease gun
- Socket Set, 3/8” or 1/2” drive

Important Notes

1. Shear bolts are designed into this product and are meant to be sacrificial to prevent damage to more important components. An extra set of shear bolts have been supplied with the initial product purchase. More are available if needed (see Mechanical Stop Shear Bolts p/n: GRP-GP30-MSSB on page 12).
2. Once installation is complete, start your tractor and carefully actuate the ***Iron Fist Grapple*** and the loader through all ranges of movement. Check for leaks and tighten any loose connections. Be sure the hoses from the hydraulic cylinder do not bind, kink, or become stretched at any point throughout the ranges of motion. If this situation appears, adjust the hose routing, as required, or contact Artillian.
3. Hydraulic performance (clamping speed and power) depends on the output of the tractor. A tractor with higher flow rates and system pressure will yield higher grapple performance than a tractor with lower flow rates and system pressure.
4. Maximum hydraulic pressure is 3,000 PSI.
5. When disconnecting the grapple / pallet fork frame from your loader, **REMEMBER TO DISCONNECT THE HYDRAULIC LINES!**

Mechanical Stops & Shear Bolts

In order to prevent over-rotation of the upper jaw assembly, two mechanical stops are attached to the medial segment of the upper jaw. These mechanical stops are fastened to the assembly using ¼” shear bolts.

Much like on a snow blower, the mechanical stops and shear bolts act as sacrificial components to prevent damage to the hinges and linkages in the upper jaw.

Opening and closing the jaws without an object in them will result in the shear bolts breaking. (8) Extra shear bolts are supplied in the kit.

Note:
When replacing the shear bolts, it is recommended to open the jaw slightly, then install the shear bolts finger tight. Close the jaw fully and then tighten the shear bolts until snug.

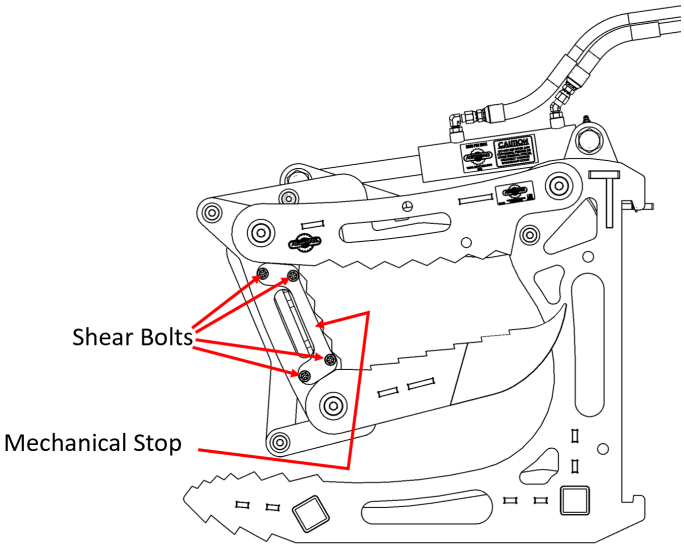

Important Notes (cont’d on the next page)

IMPORTANT NOTES (cont'd. from previous page)

Using the Iron Fist Grapple with "True" 3rd Function Kits

Artillian ***Hydraulic Diverter Kits*** divert the fluid from the loader's dump/curl circuit to the grapple open/close circuit. Therefore, the operator is able to meter the hydraulic fluid flow to the grapple by restricting the movement of the loader joystick.

However, with most "True" 3rd function kits, the electrical switch acts as an On/Off switch to the fluid flow in either direction. Therefore, the grapple cylinder will immediately see full fluid flow and pressure from the tractor when the switch is depressed. On larger tractors with high pressure and flow, this results in rapid opening and closing of the jaws, which may result in premature shear bolt breakage, due to the difficulty in controlling the jaw movement.

When using 3rd function hydraulic kits not supplied by Artillian, we recommend incorporating a hydraulic flow control needle valve into the circuit. This flow control valve should be placed between the tractor 3rd function hydraulics and the grapple splitter manifold. It should have female ¼" NPT fittings and flow control in both directions. The flow should then be metered until controlled opening and closing of the grapple jaws is possible.

Maintenance

Hydraulic Hoses

After a short amount of use of the ***Iron Fist Grapple Module***, check all hydraulic fittings for leaks. If necessary, tighten slightly further. Check hoses occasionally for signs of abrasion, binding, or other damage. Most fittings in the kit do not need to be extremely tight to obtain a seal. Use care not to overtighten, as damage to the fittings can result.

Hinge Hardware

The primary hinge hardware requires no maintenance aside from being maintained at 160 Ft.-lb. of torque, which is set at the factory. Check occasionally to ensure that the fasteners have not loosened. If excessive play is observed in the upper clamping assembly, the hinge bushings may need to be replaced.

The secondary (linkage) hardware also requires no maintenance. These fasteners should simply be tightened until snug. Do not overtighten, as this may result in binding of the grapple. If excessive play is observed in the upper clamping assembly, the linkage bushings may also need to be replaced.

Cylinder Mounting Hardware

The cylinder mounting hardware requires regular greasing of the fore and aft mounting points using a grease gun. These points are greased at the factory with long life synthetic grease. We recommend keeping these joints lubricated at approximately every four hours of use, depending on harshness of the environment.

Only tighten the cylinder mounting hardware until it remains securely in place. It should not bear upon the cylinder cross tube mounts. The cylinder mounting hardware should not need to be changed unless it becomes necessary to change the hydraulic cylinder.

INSTALLATION

Upper Assembly Installation - Step 1

The ***Artillian Iron Fist Grapple Upper Assembly*** weighs over 70 Lbs. it is recommended that someone assists with any lifting of the assembly. Placing a couple of 2X4's on the lower jaw prior to beginning installation will ease the assembly and help prevent scratching of the powder coat.

1. Rest the upper assembly on the 2X4's and ensure that the cylinder is either resting on top of the cylinder mounting plate or rotated away from the lower jaw entirely.
2. Slide the upper assembly towards the lower assembly, making sure that the linkages fall between the lower tines. The objective here is to position the distal segment on the 2X4's in a location where the proximal segment hinge holes align to the hinge mounting holes in the lower segment.
3. Lift up on the proximal segment of the upper assembly (rotating it on the medial segment hinges) and install the primary hinge bearings (larger diameter sleeve bearing) from the inside - out.
4. Lower the proximal segment down and align the hinge bearings to the hinge mounting holes.
5. Install a 3/4" X 1-1/2" washer onto a 3/4" shoulder bolt and pass it through the proximal segment hinge bearing then through the hinge mounting hole in the lower segment. Secure with a 5/8-11 hex flange nut.
6. Repeat on the opposite side.
7. Torque fasteners to 160 FT-LBS.

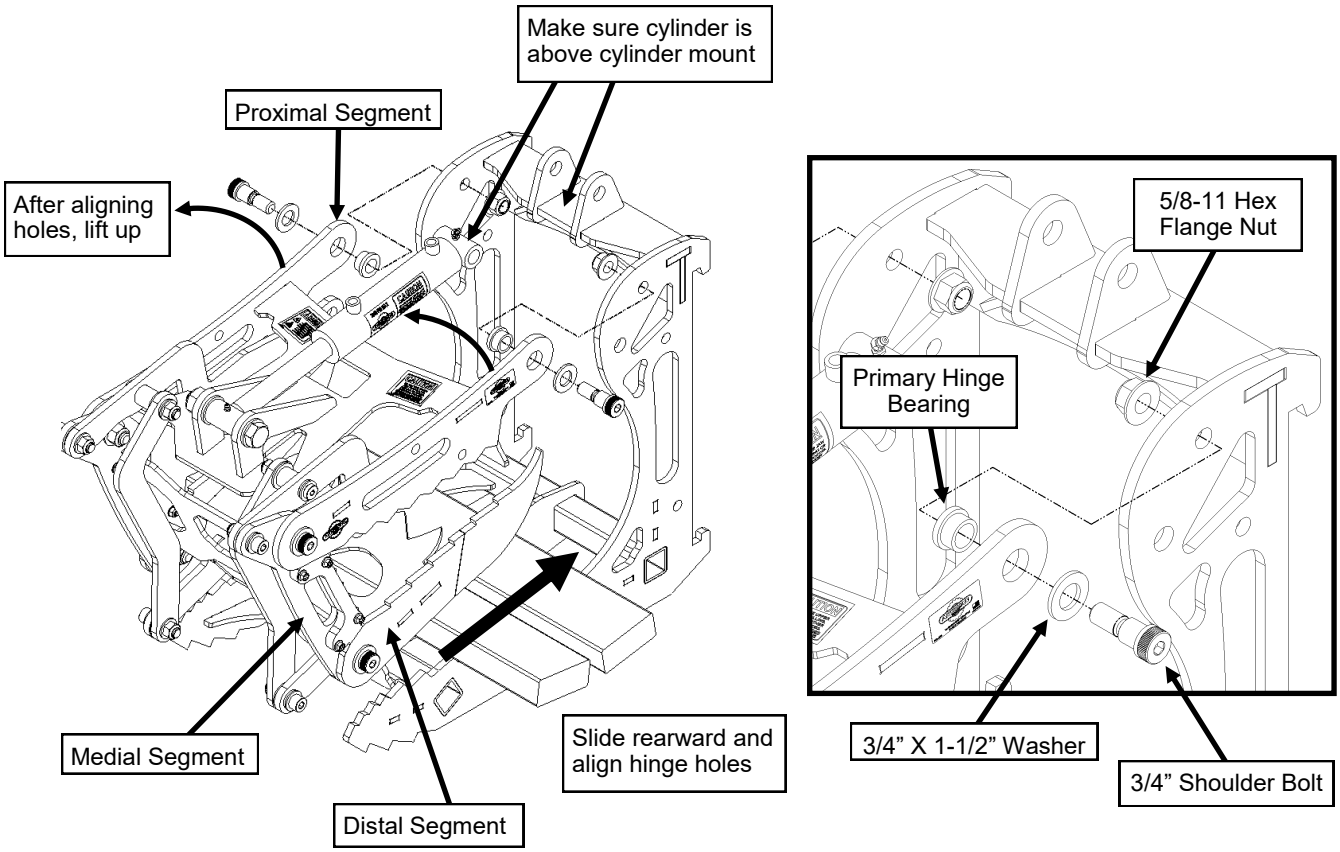

INSTALLATION

Upper Assembly Installation - Step 2

This step requires passing a linkage hinge bearing through the lower jaw linkage hinge hole, installing a washer onto that bearing, and then installing the linkage onto the bearing. Loosening the linkage hinge fasteners on the upper assembly (without removing them) will ease the installation of the linkage onto the bearing.

1. With the linkages hanging down below the linkage hinge holes in the lower jaw, install linkage hinge bearings (smaller diameter sleeve bearing) into the lower jaw linkage hinge holes from the outside - in.
2. Install a 13/16” X 1-3/8” washer onto hinge bearing. Repeat on opposite side.
3. Using caution not to push the linkage hinge bearings out of the holes (causing the washers to fall off), lift up on the linkages and position them onto the linkage hinge bearings.

Note: It may be helpful to have an assistant work on the opposite side at the same time. Lifting up on the distal segment and moving the medial segment forward or backwards may also facilitate the positioning of the linkages.

4. Install 1/2-13 X 1-3/4” long socket head cap screws with 1/2” X 1” washers and secure with 1/2-13 hex flange nuts. Tighten just until snug. Do not overtighten.
5. Retighten linkage hinge fasteners on upper assembly until snug. Do not overtighten.

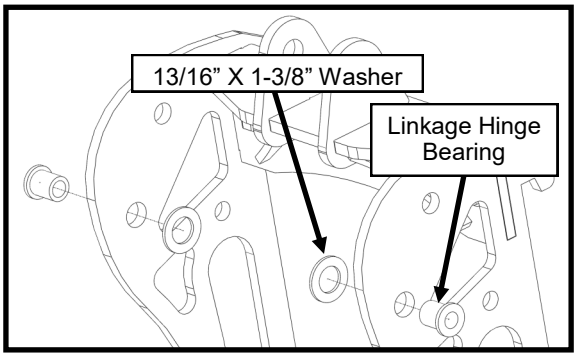

LINKAGE HINGE BEARING INSTALLATION
(UPPER ASSEMBLY HIDDEN FOR CLARITY)

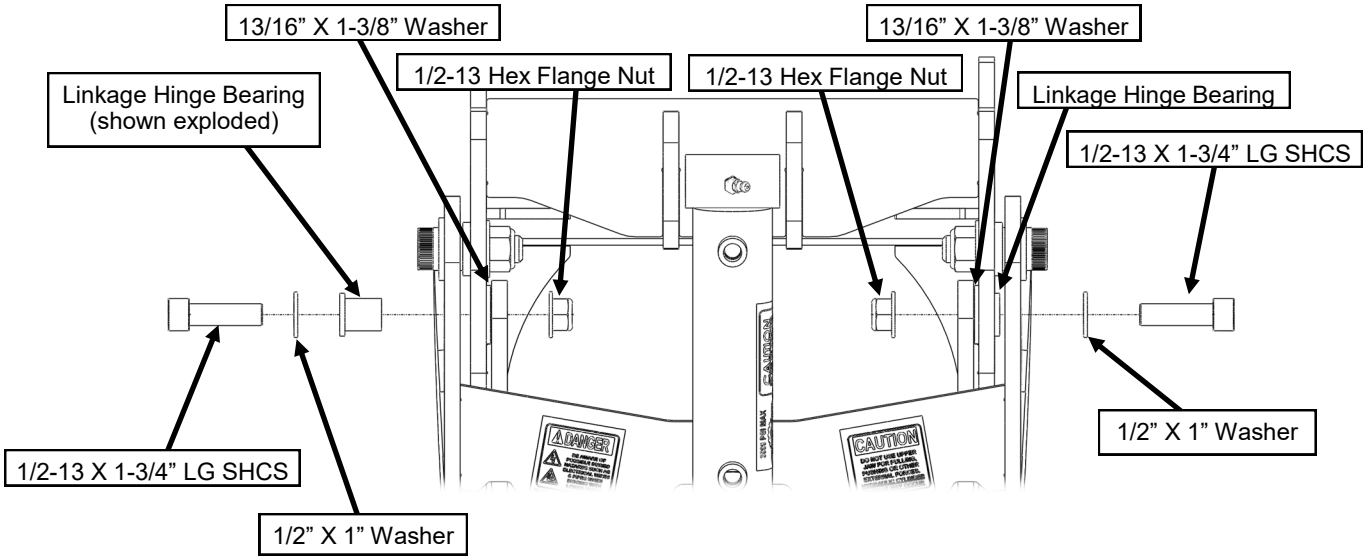

INSTALLATION

Upper Assembly Installation - Step 3

The ***Artillian Iron Fist Grapple*** ships with some hydraulic fluid in the cylinder to maintain lubrication. Loosening of the factory installed plugs may be necessary to position the cylinder for fastening. It is recommended that the installer place a bucket and/or rag under the cylinder for this step.

1. Place a 3/4” X 1-1/2” washer onto the 3/4-10 X 4-1/2” long hex bolt and pass through one of the cylinder mount holes, as shown below. Just under 1/4” of the screw should be exposed between the cylinder mounts.
2. Install a second washer onto the screw on the inside of the cylinder mount.
3. Using caution not to drop the second washer, align the cylinder sleeve with the screw and pass the screw through until it just barely protrudes from the cylinder sleeve.

Note: the cylinder may need to be manually extended or contracted to align with the holes. This will likely cause hydraulic oil to leak out of the fittings.

4. Install a third washer between the cylinder sleeve and the second cylinder mount ear.
5. Pass the screw through the second cylinder mount, add the fourth washer, and secure with a 3/4-10 hex nut.
6. Tighten until snug. Do not overtighten, as it will cause the cylinder to bind.
7. Apply long life synthetic grease into the grease fitting on the cylinder mounting sleeve.

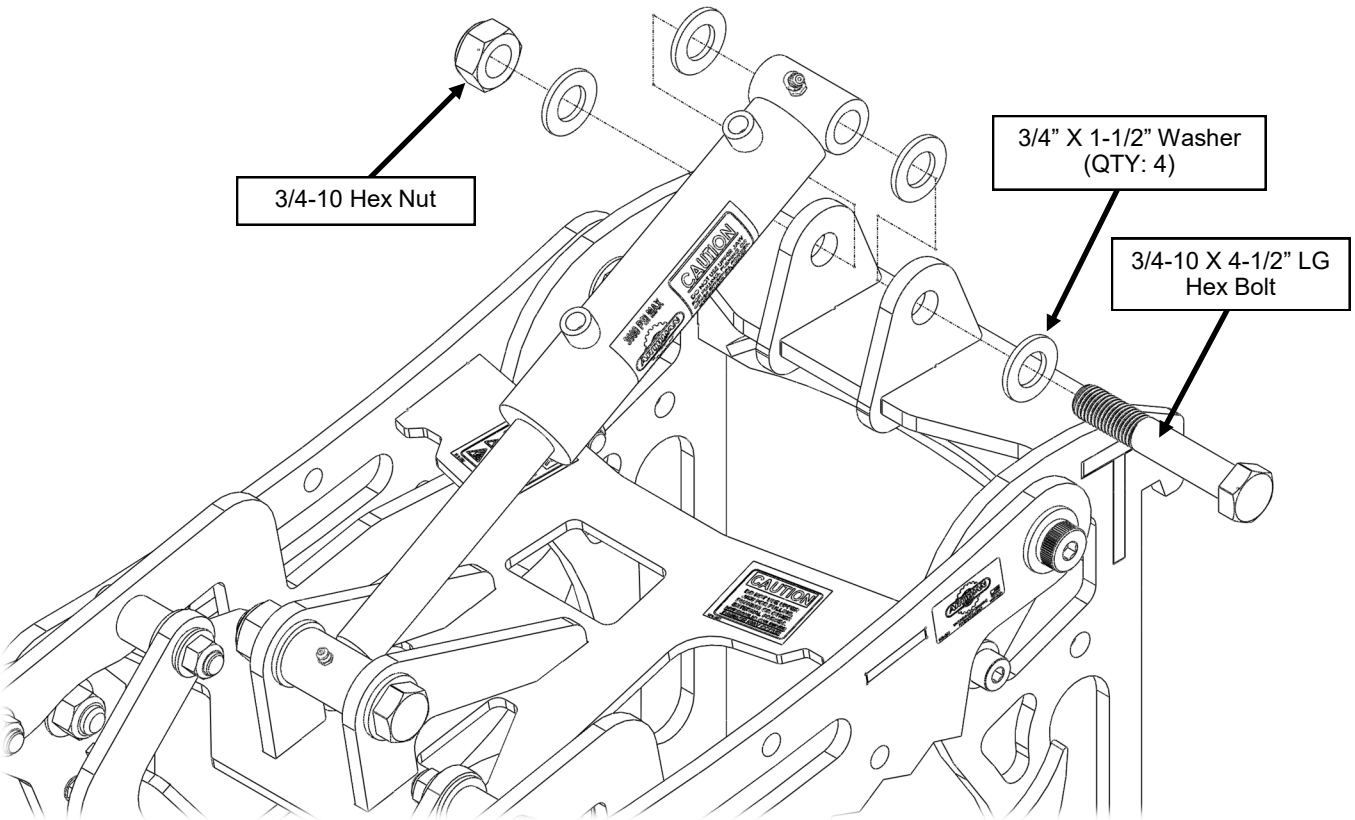

INSTALLATION

Hydraulic Hose Assembly

The ***Artillian Iron Fist Grapple*** ships with some hydraulic fluid in the cylinder to maintain lubrication. It is recommended that the installer place a bucket and/or rag under the cylinder while installing the hoses to catch any fluid that escapes.

1. Remove the plugs from the cylinder ports.
2. Remove the 90° elbow from the longer hose and install it in the forward most (rod end) cylinder port. The fitting should be facing rearward, inline with the cylinder, as shown below.
3. Remove the 45° elbow from the shorter hose and install it in the rearward most cylinder port. The fitting should be facing rearward, inline with the cylinder, as shown below.
4. Install the respective hoses back onto the fittings. Ensure that the opposite end quick disconnect fittings are parallel and then tighten the swivel connectors onto the elbow fittings on the cylinder.

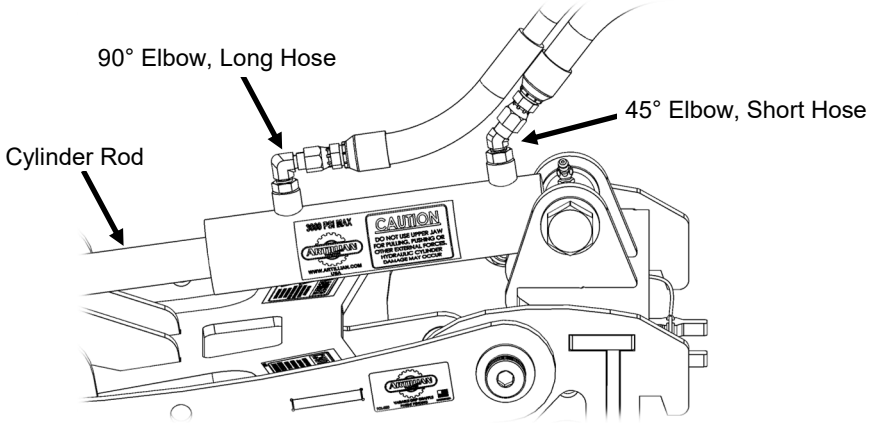

Mounting Modules onto Pallet Fork Frame

The illustrations in this manual assume that an ***Artillian Pallet Fork Frame*** is installed on the tractor front end loader (not shown) and any forks or other attachments have been removed from the fork frame. Note: This system **IS NOT COMPATIBLE** with other brands of pallet fork frames.

Modules can be installed either by lifting and installing each module one at a time onto the frame or you can use your tractor to pick and lift the modules from the ground. To do this, approach the module with the pallet fork frame, carefully catching the upper hooks, as shown below, and lifting each module up one at a time, then shift into place. Note: The intended **CENTER MODULE** should be hung first.

1. Hang a module by the upper hooks onto the fork rail. Hang one hook near the center of the fork rail and the other hook into one of the fork detent slots. Allow the module to rest flat against the pallet fork frame so that both lower hooks pass under the bottom rail. **Make sure to loop the key locks over the module prior to installation.**

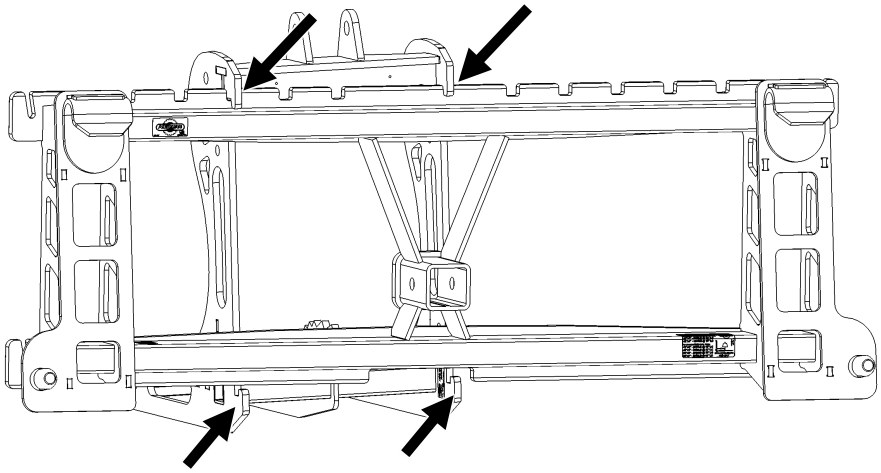

INSTALLATION

Mounting Modules onto Pallet Fork Frame Continued...

2. Lift the module straight up by its lifting handles and slide the module along the fork rail into its desired position. Use caution not to disengage the lower hooks from the bottom rail while sliding the module. Align the round holes in the modules with the fork detents in the fork rail.

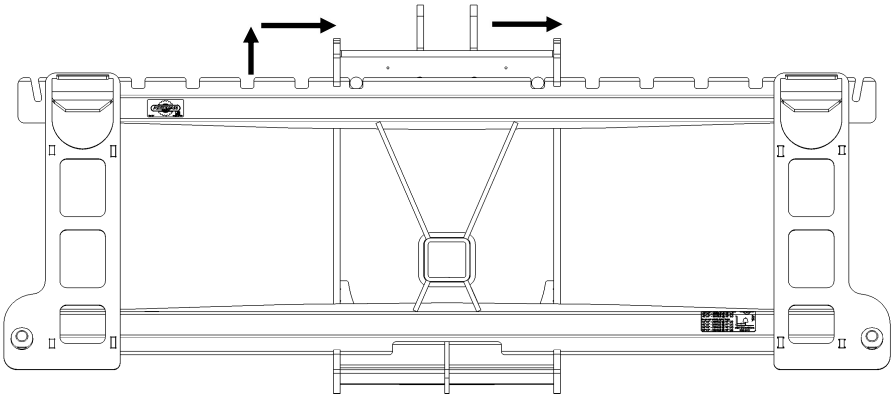

3. To install the outer modules, hang the upper hooks of the module into the fork detent slots, as shown below. The lower hooks should pass under the lower rail. **Again, make sure to loop the key locks over the module prior to installation.**

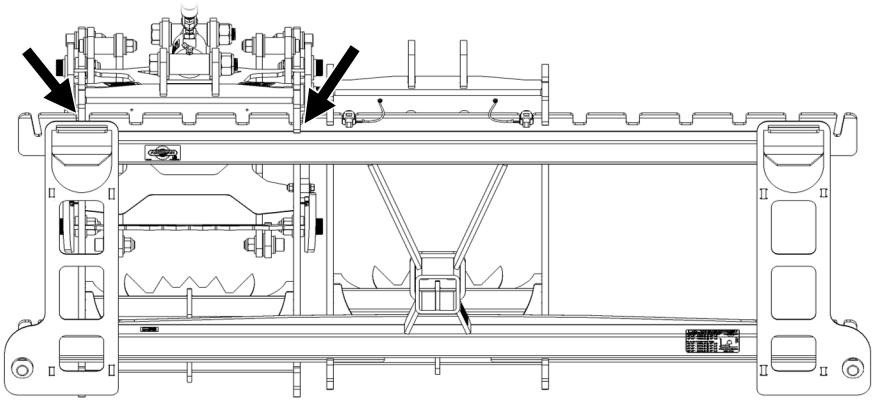

4. Lift the module straight up by its lifting handles and slide the module along the fork rail into position. Use caution not to disengage the lower hooks from the bottom rail while sliding the module. Align the round holes in the modules with the fork detents in the fork rail.

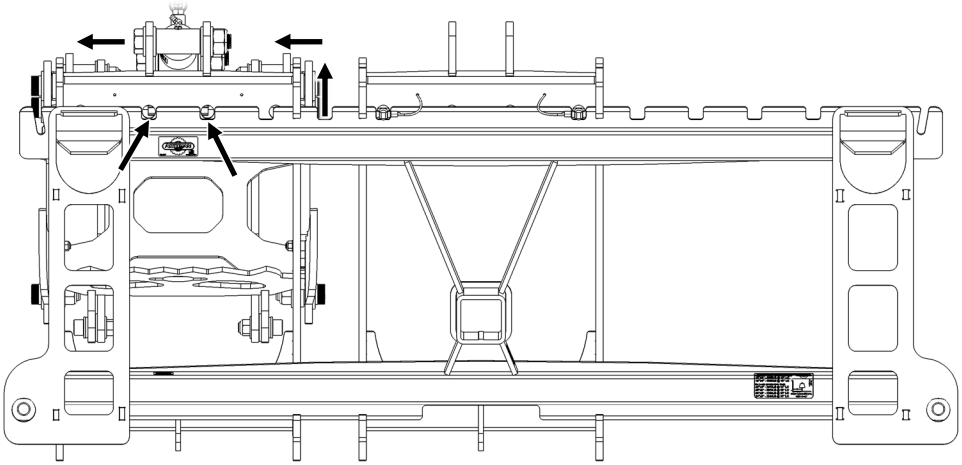

INSTALLATION

Secure Modules in place using proprietary Key Locks

1. Locate module along the fork rail so the round holes in the module align with the fork detents in the fork rail. Insert Key Lock as shown. Rotate the Key Lock so that the counterweight hangs down between the fork rail and the module.

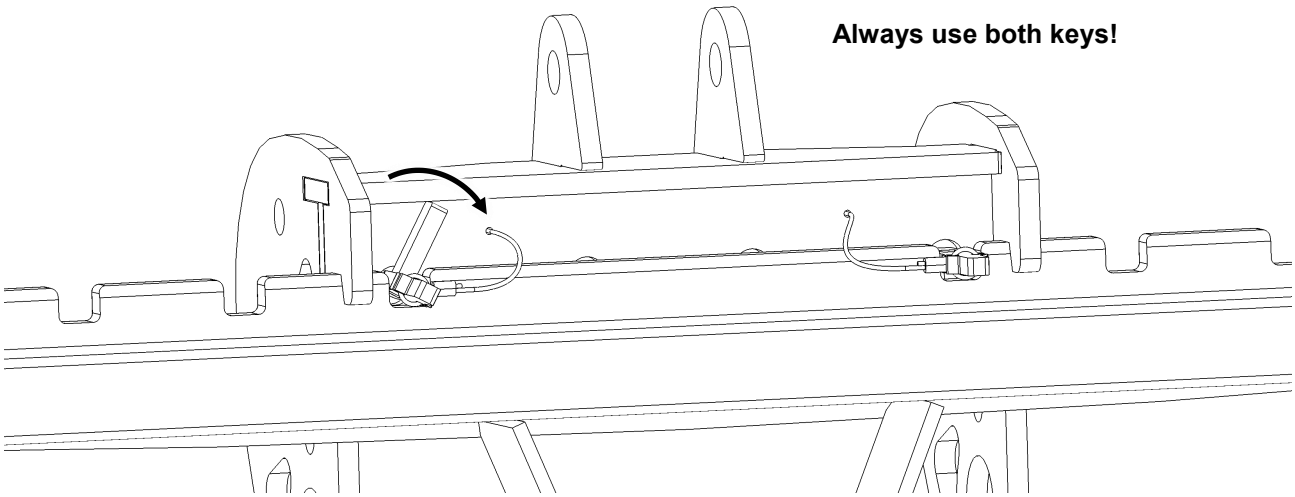

2. As shown below, center modules use the outer Key Lock holes. Outer modules use the inner Key Lock holes.

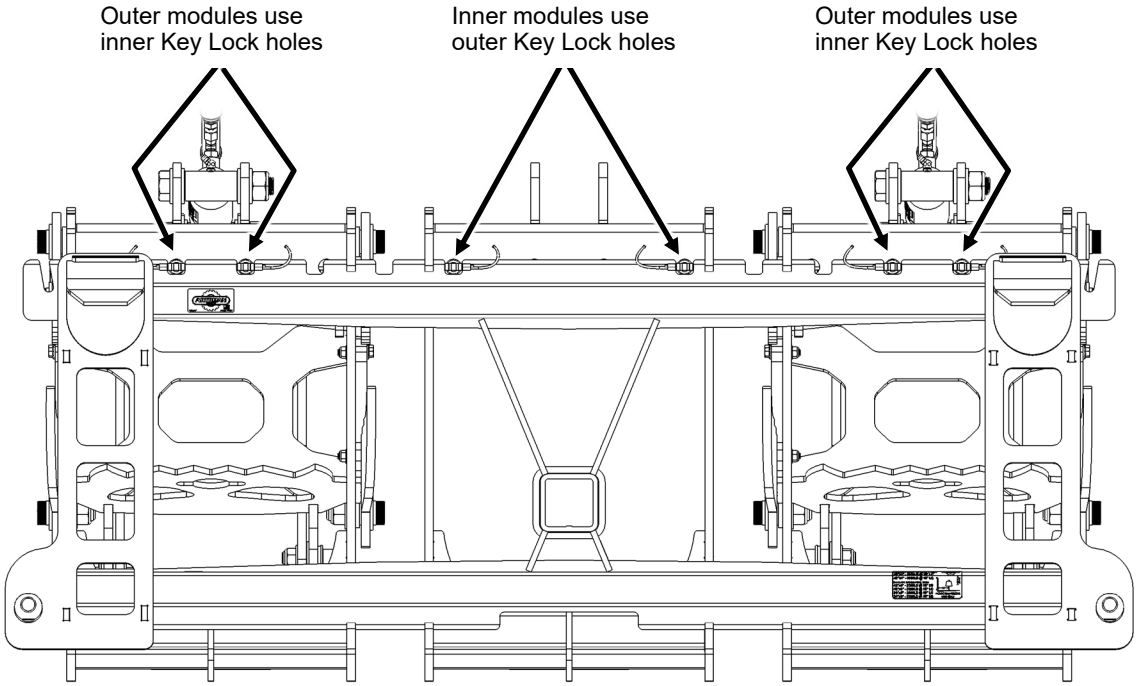

FEATURES & OPERATION

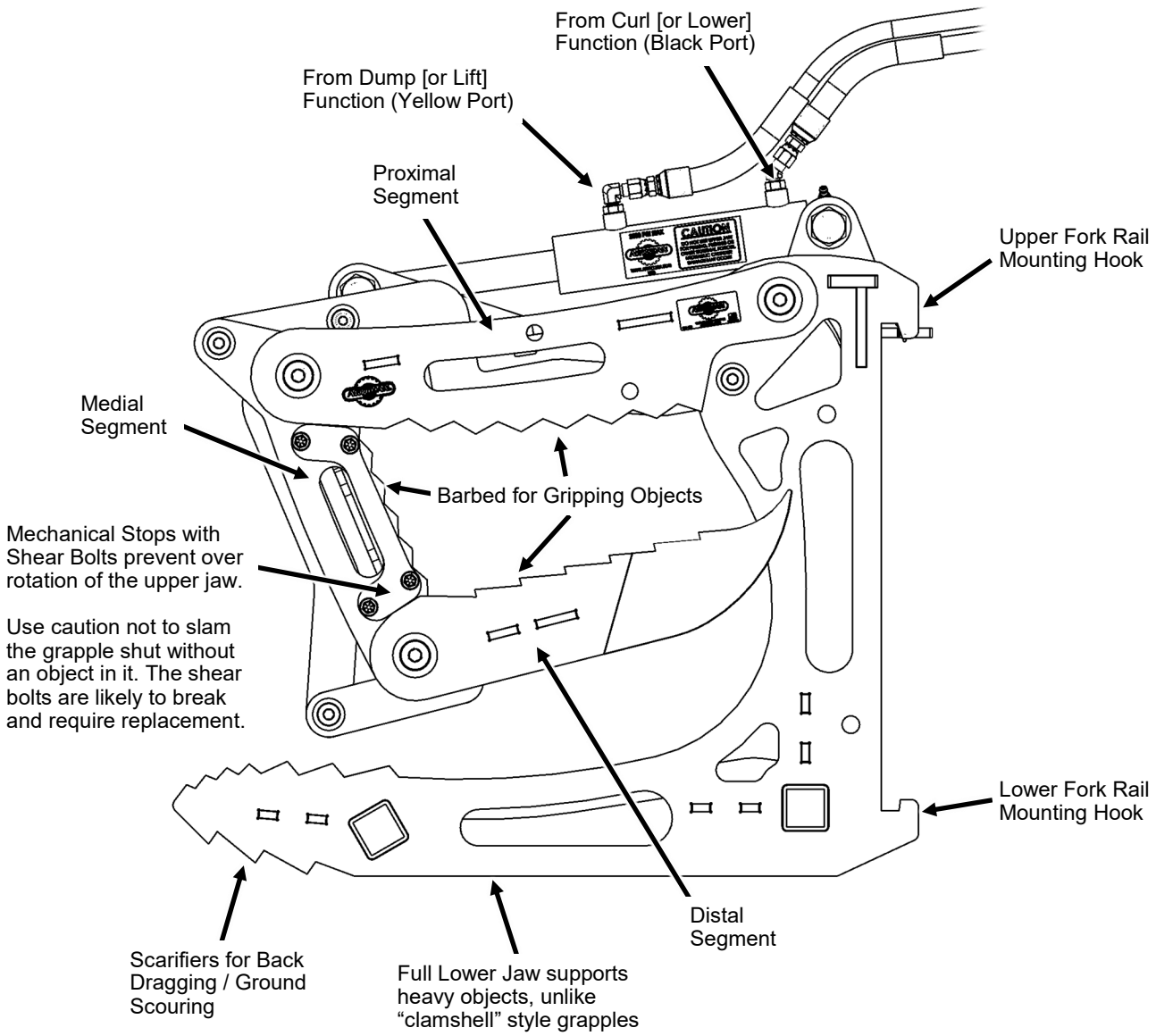

Utilizing an ***Artillian Hydraulic Diverter Kit***, the ***Iron Fist Grapple*** is opened by depressing the HDK switch and moving the loader joystick to either the Dump or Lift function, depending on how the HDK is plumbed. It is closed by moving the joystick to the Curl or Lower function.

As the cylinder is extended or retracted, the clamping assembly segments rotate with respect to each other, simulating the grasping motion of a human hand.

The result is a wide open grapple capable of engaging large brush piles, while maintaining the ability to firmly grip small objects in a compact ***Iron Fist.***

FEATURES & OPERATION CONTINUED...

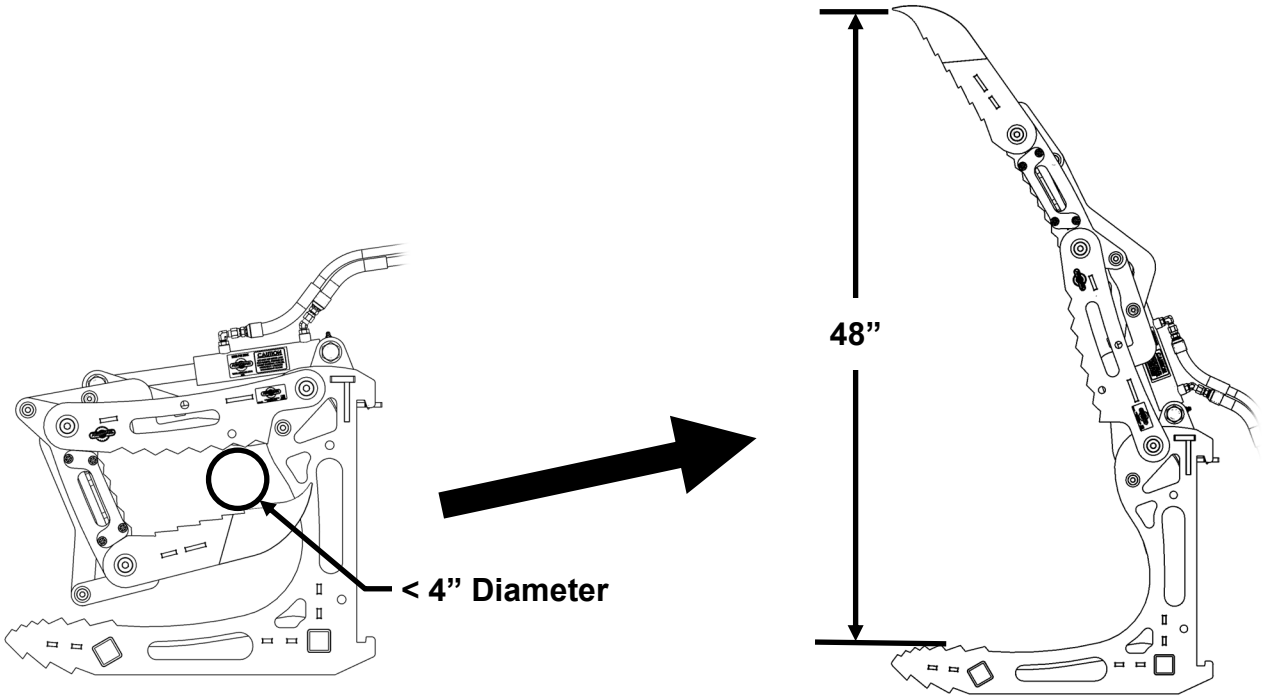

Upper and lower jaws of skull pass within ~2-1/4” of each other.

These teeth can be used to bite into small shrubs and rip them out of the ground, using the curl function of the loader.

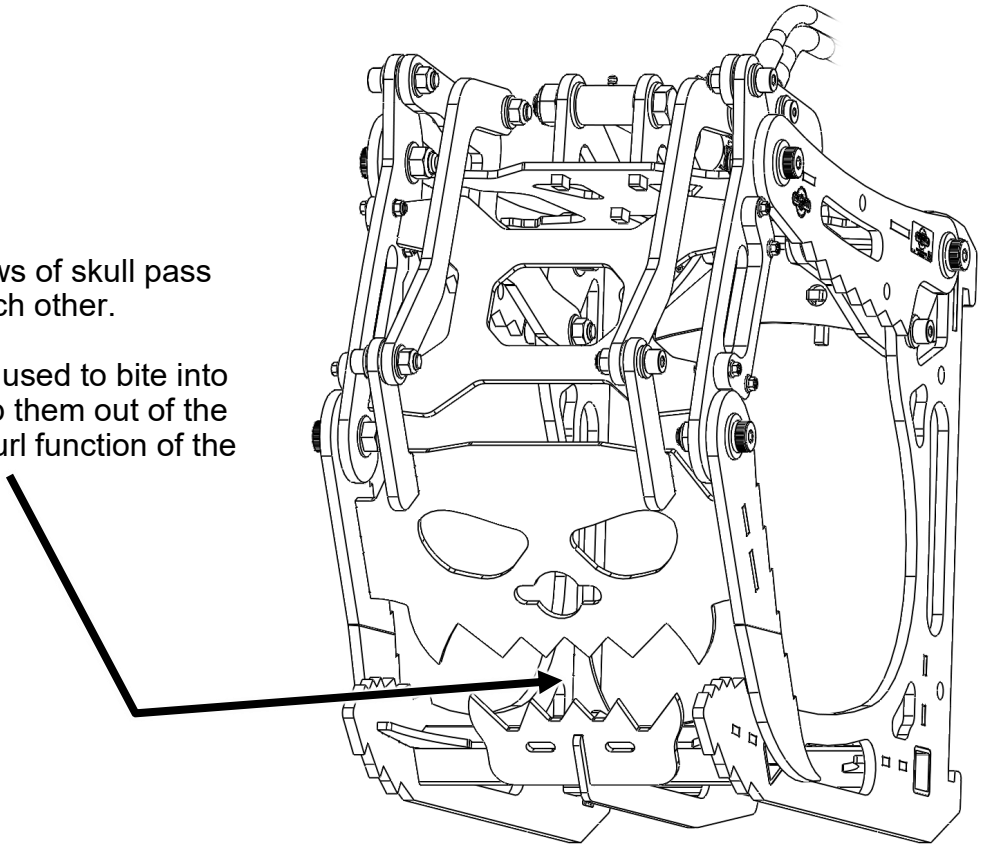

IRON FIST GRAPPLE SERVICE PARTS

HYDRAULIC HOSE ASSEMBLY,
GRAPPLE CYLINDER
P/N: HHA-GRP-CYL-FEL

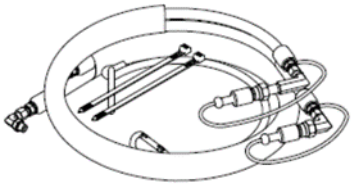

IRON FIST GRAPPLE PRIMARY HINGE
SERVICE PACK (FULL SET)
P/N: GRP-GP30-PHSP

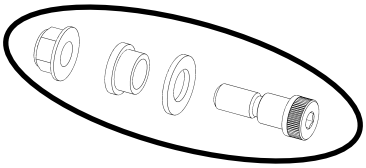

QTY: 6

IRON FIST GRAPPLE LINKAGE HINGE
SERVICE PACK (FULL SET)
P/N: GRP-GP30-LHSP

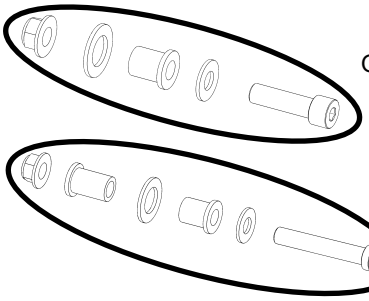

QTY: 6

QTY: 2

MECHANICAL STOPS (SET OF 2)
W/ FASTENERS
P/N: 8SV-SM-02047-TB

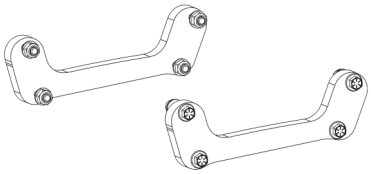

MECHANICAL STOP SHEAR BOLTS (QTY 8)
P/N: GRP-GP30-MSSB

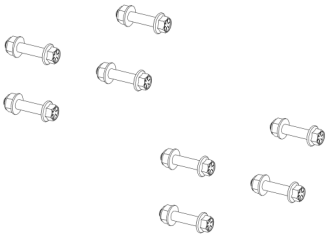

LINKAGE PROXIMAL, LEFT
P/N: 8SV-WA00527L-TB

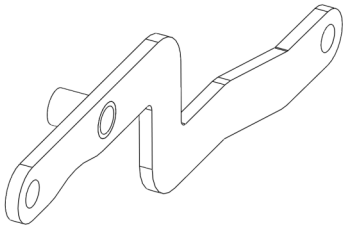

LINKAGE PROXIMAL, RIGHT
P/N: 8SV-WA00527R-TB

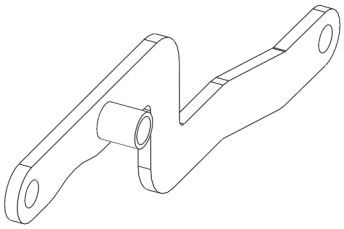

LINKAGE DISTAL
P/N: 8SV-SM-01845-TB

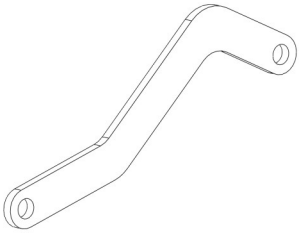

GRAPPLE HYDRAULIC CYLINDER
P/N: 8SV-HYA-00001